INSTRUCTIONS

GEK-36827B
INSERT BOOKLET GEK-26400
Supersedes GEK-36827A

DC TIMING RELAY

TYPE SAM

MODEL 12SAM17C(-)A

INTRODUCTION

This instruction book, GEK-36827, together with instruction book GEK-26400 for the 12SAM16A12, 12SAM17A12 and 12SAM17B12 and up, provides instructions for the 12SAM17C(-)A relay.

DESCRIPTION

The 12SAM17C(-)A relay is similar to the 12SAM17B(-)A relay, except that the internal wiring was modified and the targets (T1-T2) were physically relocated in the relay. This was done so that it would have a more universally accepted wiring and physical location of the targets.

The original forms (forms 1-2-3) had internal connections similar to Figure 1 of this instruction book, except there were no 0.05 microfarad capacitors between Studs 6 and 10 and Studs 8 and 10.

Later the 0.05 microfarad capacitors were added to improve the surge capability of the relay. The new forms (Form 1 Rev. A, Form 2 Rev. A, and Form 3 Rev. A) had the internal connections shown by Figure 1 of this instruction book.

Later the above forms were obsoleted and replaced by Forms 11-12-13. The new forms have a diode and capacitor connected in series with the TX coil. The diode is in the circuit to break up a sneak circuit that occurs in some applications. The internal connection for these forms is shown in Figure 3 of this instruction book.

*Form 14 is similar to form 11 except that it is rated for 48/110/220 volts DC.

The outline and panel drilling for these relays is shown in Figure 12 of the attached instructions book, GEK-26400.

*Revised since last issue

These instructions do not purport to cover all details or variations in equipment nor provide for every possible contingency to be met in connection with installation, operation or maintenance. Should further information be desired or should particular problems arise which are not covered sufficiently for the purchaser's purposes, the matter should be referred to the General Electric Company.

To the extent required the products described herein meet applicable ANSI, IEEE and NEMA standards; but no such assurance is given with respect to local codes and ordinances because they vary greatly.

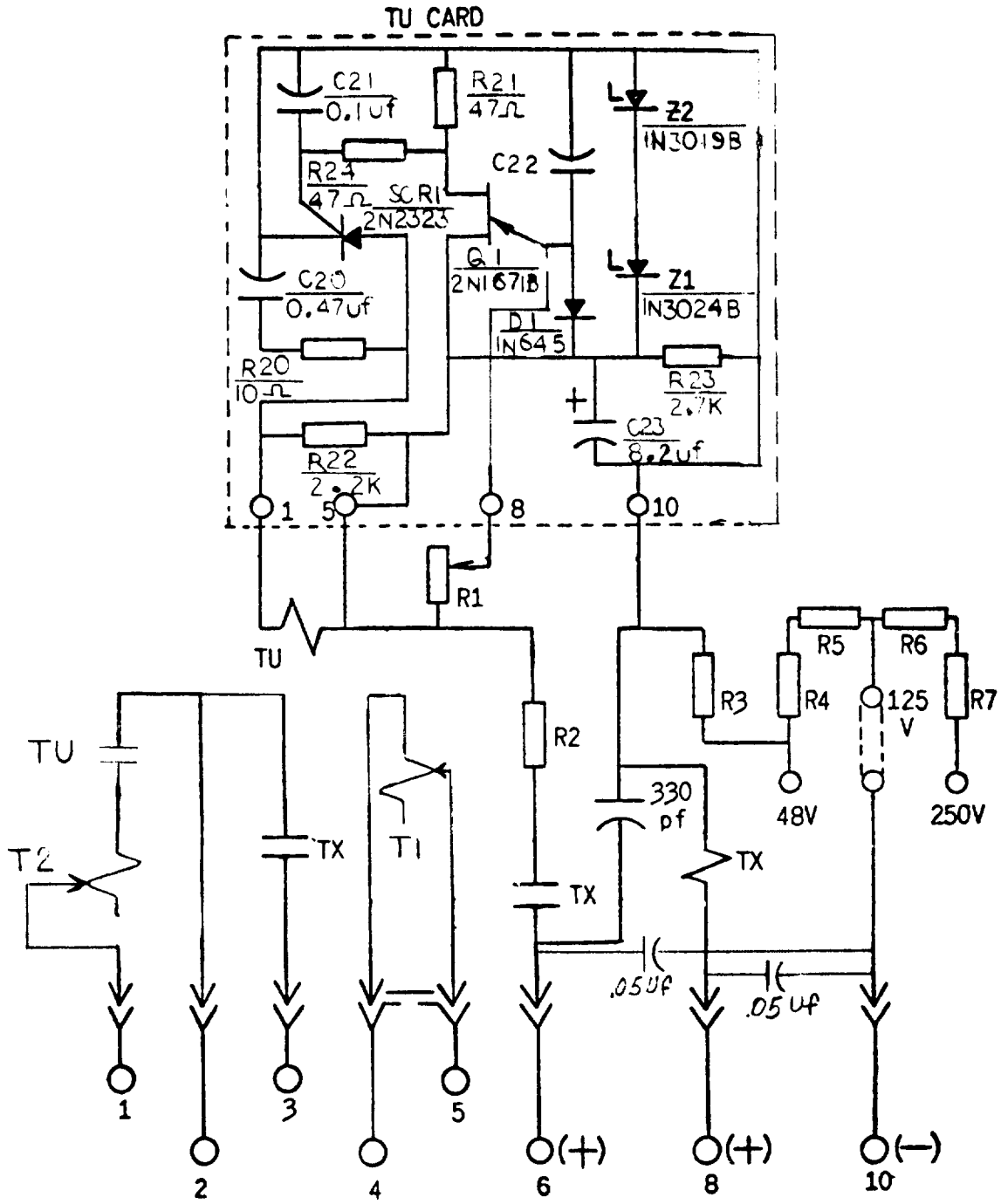

8 ○ = TIP NO ON PRINTED CIRCUIT CARD

Figure 1 (0227A7086 Sh.1 [3]) Internal Connections Diagram for the Type SAM17C Forms 1A-2A-3A

MODEL	FORM		
SAM 17C(-)A	1	2	3
VOLTS D.C.	48/125/250	48/125/250	48/125/250
TIME-SEC.	.05-3.0	0.1-5.0	.05-3.0
TAR. TAPS	1.0/4.0	1.0/4.0	0.2/2.0
RESISTANCE IN OHMS			
TX COIL	1300	1300	1300
TU COIL	650	650	650
R1	1.5 MEG	1.5 MEG	1.5 MEG.
R2	400	400	400
R3	60	60	60
R4	250	250	250
R5	250	250	250
R6	375	375	375
R7	375	375	375

TARGET BURDEN				
	0.2 AMP TAP	1.0 AMP TAP	2.0 AMP TAP	4.0 AMP TAP
MINIMUM OPERATING	0.2 AMPS	11.0 AMPS	2.0 AMPS	4.0 AMPS
CARRY CONTINUOUSLY	0.4 AMPS	2.5 AMPS	3.5 AMPS	6.0 AMPS
CARRY 30 AMPS FOR	--------	1.0 SEC.	4 SECS.	5.0 SEC.
CARRY 10 AMPS FOR	0.1 SEC.	10.0 SEC.	30 SECS.	50.0 SEC.
DC RESISTANCE	7 OHMS	0.25 OHMS	0.13 OHMS	0.034 OHM
60 CYCLE IMPEDANCE	52 OHMS	2.0 OHMS	0.53 OHMS	0.13 OHMS

Figure 2 (0227A7086 Sh.2 [1]) Resistance Values for the Type SAM17C Forms 1-2-3

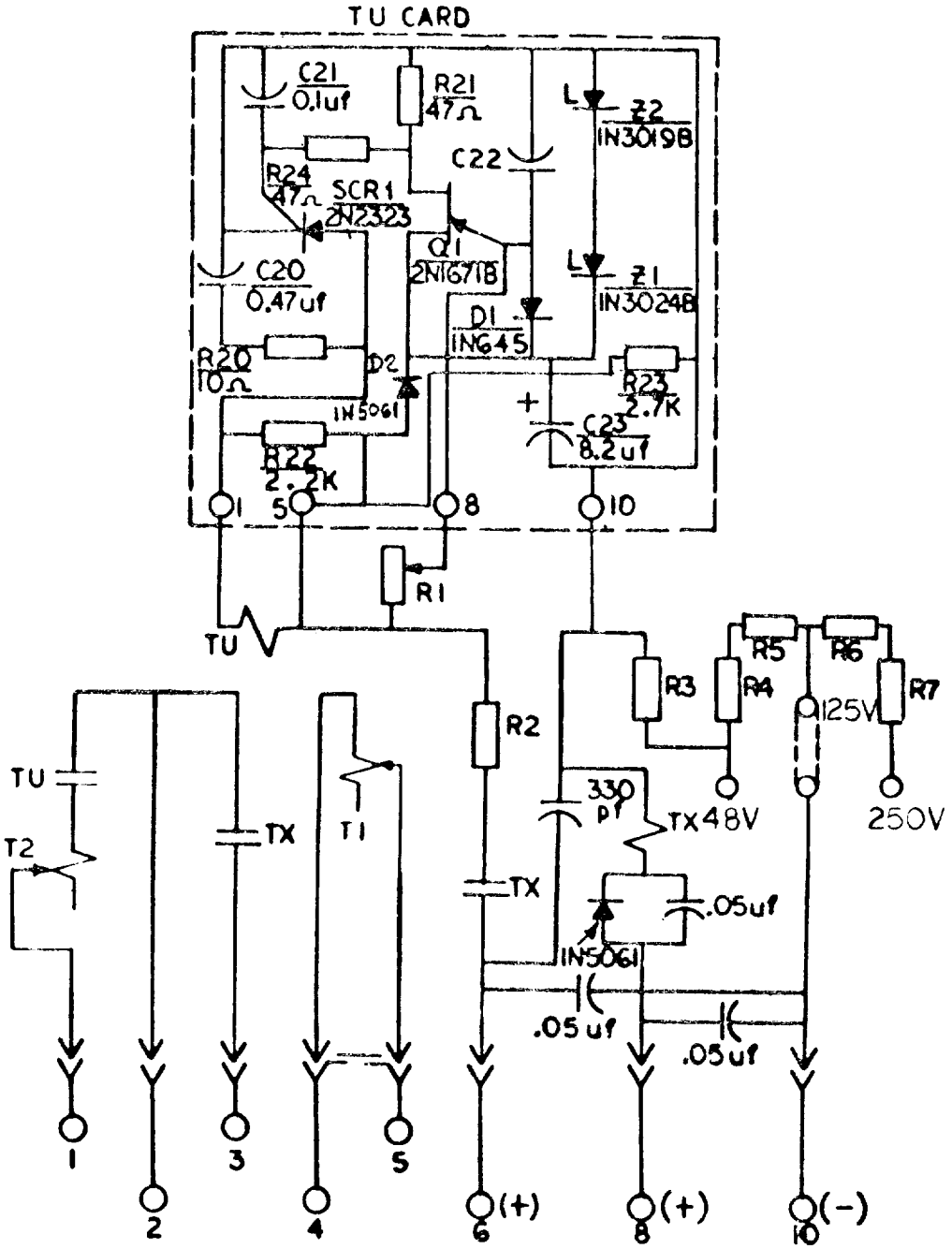

*Figure 3 (0269A3091 Sh.1 [3]) Internal Connection Diagram for the Type SAM17C Forms 11-12-13-14

*Revised since last issue

MODEL	FORM			
SAM 17C(-)A	11	12	13	14
VOLTS D.C.	48/125/250	48/125/250	48/125/250	48/110/220
TIME-SEC.	.05-3.0	0.1-5.0	.05-3.0	.05-3.0
TAR. TAPS	1.0/4.0	1.0/4.0	0.2/2.0	1.0/4.0
RESISTANCE IN OHMS				
TX COIL	1300	1300	1300	1300
TU COIL	650	650	650	650
R1	1.5 MEG.	1.5 MEG.	1.5 MEG.	1.5 MEG.
R2	400	400	400	400
R3	60	60	60	60
R4	250	250	250	350
R5	250	250	250	350
R6	375	375	375	500
R7	375	375	375	500

TARGET BURDEN				
	0.2 AMP TAP	1.0 AMP TAP	2.0 AMP TAP	4.0 AMP TAP
MINIMUM OPERATING	0.2 AMPS	1.0 AMPS	2.0 AMPS	4.0 AMPS
CARRY CONTINUOUSLY	0.4 AMPS	2.5 AMPS	3.5 AMPS	6.0 AMPS
CARRY 30 AMPS FOR	-------	1.0 SEC.	4 SECS.	5.0 SEC.
CARRY 10 AMPS FOR	0.1 SEC.	10.0 SEC.	30 SECS.	50.0 SEC.
DC RESISTANCE	7 OHMS	0.25 OHMS	0.13 OHMS	0.034 OHM
60 CYCLE IMPEDANCE	52 OHMS	2.0 OHMS	0.53 OHMS	0.13 OHMS

*Figure 4 (0269A3091 Sh.2 [1]) Resistance Values for the Type SAM17C Forms 11-12-13-14

*Revised since last issue

GE Power Management

215 Anderson Avenue
Markham, Ontario
Canada L6E 1B3
Tel: (905) 294-6222
Fax: (905) 201-2098
www.ge.com/indsys/pm

GEK-26400E

INSTRUCTIONS

DC OPERATED TIMING RELAYS

TYPES

SAM16A12 AND UP

SAM17A22 AND UP

SAM17B12 AND UP

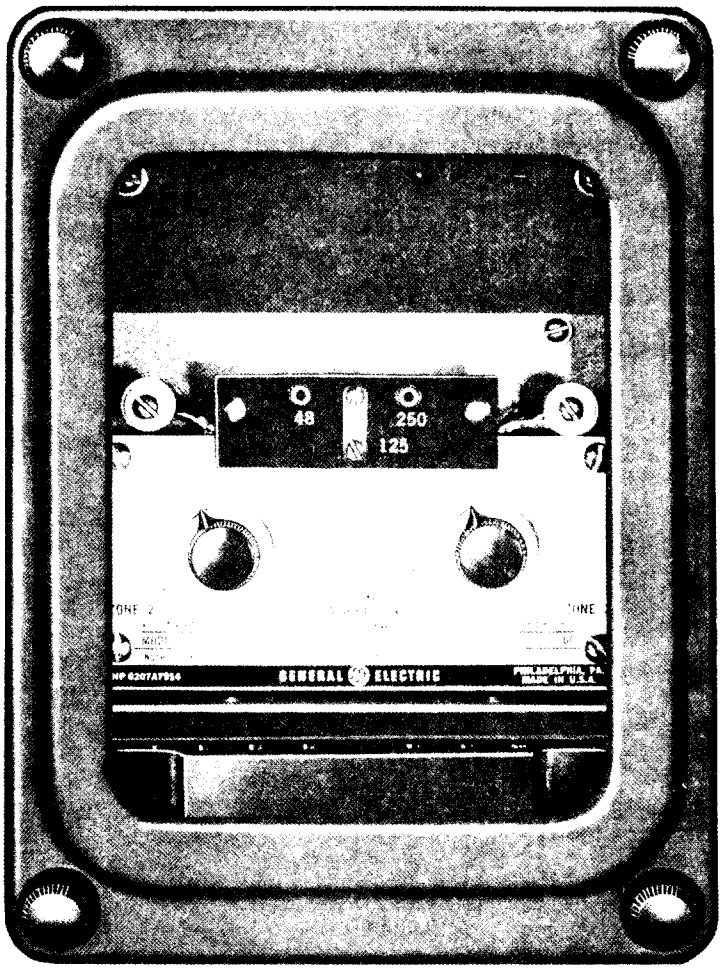

GENERAL ELECTRIC

TABLE OF CONTENTS

	PAGE
DESCRIPTION	3
APPLICATION	3
RATINGS	3
OPERATING PRINCIPLES	4
CHARACTERISTICS	4
BURDENS	5
CONSTRUCTION	6
RECEIVING, HANDLING, AND STORAGE	6
ACCEPTANCE TESTS	7
VISUAL INSPECTION	7
MECHANICAL INSPECTION	7
ELECTRICAL TESTS	7
INSTALLATION PROCEDURE	8
LOCATION	8
MOUNTING	8
CONNECTIONS	8
INSPECTION	8
VOLTAGE SELECTION LINK	8
TIME SETTINGS	8
PERIODIC CHECKS AND ROUTINE MAINTENANCE	9
CONTACT CLEANING	9
SERVICING	9
AUXILIARY UNITS	9
TIMING CIRCUITS	10
RENEWAL PARTS	10

Cover Photo (8039886)

D-C OPERATED TIMING RELAY

TYPE SAM16A AND SAM17A

DESCRIPTION

The SAM16A, SAM17A, and SAM17B relays are highly accurate static timing relays designed for use with zone packaged distance relays. The SAM16A has two independently adjustable timing circuits while the SAM17A and SAM17B have only one. The SAM16A and SAM17A relays have no targets and the SAM17B relay contains two. These relays are supplied in S1 cases.

APPLICATION

The SAM16 and SAM17 relays find application wherever a highly accurate, repetitive, quick reset timer having negligible overtravel is desired. Specifically, these relays were designed to be used as timing relays for zone packaged distance relays. One SAM16A would be used in three step schemes where two time delay zones are employed. One SAM17A and SAM17B relay would be applied in two step schemes where only one time delay zone is needed.

Figures 3 and 3A show typical external connection diagrams for the SAM16A and SAM17A relays when used with zone packaged distance relays for three and two zone distance protection.

RATINGS

The SAM16 and SAM17 relays covered by these instructions have a DC voltage rating of 48/125/250 volts, selected by means of a link setting which can be made from the front of the relay. These relays are available in timing ranges of .03-1 second or .05-3 seconds.

TABLE I

VOLTS	CURRENT INDUCTIVE ††	CURRENT NON-INDUCTIVE
48 V DC	1.0	3.0
125 V DC	0.5	1.5
250 V DC	0.25	0.75
115 V 60 Cyc	0.75	2.0
230 V 60 Cyc	0.5	1.0

†† Inductance of average trip coil

These instructions do not purport to cover all details or variations in equipment nor provide for every possible contingency to be met in connection with installation, operation or maintenance. Should further information be desired or should particular problems arise which are not covered sufficiently for the purchaser's purposes, the matter should be referred to the General Electric Company.

To the extent required the products described herein meet applicable ANSI, IEEE and NEMA standards; but no such assurance is given with respect to local codes and ordinances because they vary greatly.

The contacts of the auxiliary units TU2 and TU3 will close and carry momentarily 30 amperes DC at control voltages of 250 volts or less. These contacts will carry 3 amperes continuously and have an interrupting rating as shown in Table I.

OPERATING PRINCIPLES

The operating principles of the SAM16 and 17 timing circuits can best be described with the aid of the simplified schematic diagram of Figure 4 which shows the TU2 timing circuit. The timing sequence is initiated by a contact of the TX auxiliary unit, which is picked up by the protective relay. Basically the circuit measures the time it takes to charge a capacitor (C_1) to a definite voltage through an adjustable resistor (R_1). Zener regulators (Z_1) hold the voltage across the resistor-capacitor combination at a constant value so that charging time will vary directly with the setting of R_1 and will be practically independent of fluctuations in the DC voltage supply. When the charge on capacitor C_1 reaches a definite value, unijunction transistor T_1 will be turned on. This in turn triggers a controlled rectifier SCR_1 which picks up the auxiliary unit TU2. If the initiating contact opens dropping out TX prior to the completion of the timing cycle, diode D_1 provides a low-resistance discharge path for the capacitor so that the timing circuit will completely reset in a very short time (see **CHARACTERISTICS**).

CHARACTERISTICS

The timing circuits of the SAM16A and SAM17A relays are designed to provide an extremely accurate and stable time delay function. The dial for each timing circuit has been calibrated at the factory for seven operating times. For example, the 3-second timers, which are frequently used in distance relay applications, are calibrated at 0.1, 0.2, 0.3, 0.5, 1.0, 2.0, and 3.0 seconds. As will be noted in Figure 1, the calibration scale is expanded at the low end to permit more accurate short time settings.

If the calibration knob is reset in the field at one of the factory set points, the timing circuit will be accurate within ±3% of the dial marking if checked at rated voltage and an ambient temperature of approximately 25°C. Once set for a particular time and then subsequently rechecked under identical operating conditions without disturbing the calibration knob, the timing circuits will repeat within 1% of the original setting.

The use of zener regulators across the input to the timing circuit makes the timing circuits inherently independent of changes in the DC voltage supply. The curves in Figure 5 show the small percentage change in time for control voltage changes from 60% to 112% of normal for nominal time settings of 0.1, 1.5, and 3.0 seconds. The larger percentage error at the 0.1 second time setting results from the fact that the TX unit pickup time increases at reduced voltage and this change shows up as a larger percentage at the lower time settings.

The factory calibration points on the dial plate were made in an ambient temperature of approximately 25°C. The realys can be safely operated at ambient temperature from -20°C to +60°C. The change in operating time over this ambient range will be less that ±4% of the time at 25°C for any time setting.

The timing circuits include a discharge rectifier (D_1 in Figure 4) which provides a low resistance discharge path for the capacitor charge the instant that the initiating contact de-energizes the timing circuit. The reset time is 67

milliseconds (4 cycles on a 60 cycle basis). If the timing circuit is de-energized for this interval or longer, subsequent operations will occur within 3% of the nominal set operating time.

The nature of the timing circuit is such that overtravel is practically nonexistent in the SAM16A and SAM17A relays. This elimination of overtravel is one advantage this solid state relay has over a similar electromechanical relay.

BURDENS

Table II lists the maximum current drawn by the TX coil circuit (stud 7 or 8), and by the timing circuit (stud 6) after TX operates. Because common resistors are used for the TX coil and regulator circuits, the current in the TX coil for the 125 and 250 V link settings will decrease when the TX contact closes. Both initial and final values are shown in the table. Since the SAM17 relays have only one timing circuit, the current drawn by this relay will be reduced by approximately .05 ampere.

TABLE II

RELAY	CIRCUIT	TX CONTACT POSITION	CURRENT FOR LINK SETTING SHOWN			CURRENT FOR LINK SETTING SHOWN		
			48	125	250	48	110	220
SAM16A	TX Coil (Stud 8 or 9)	OPEN	0.036	0.068	0.097	0.036	0.064	0.090
	TX Coil (Stud 8 or 9)	CLOSED	0.034	0.040	0.043	0.034	0.037	0.040
	Timing Circuit (Stud 6)	CLOSED	0.035	0.098	0.107	0.035	0.090	0.093
	Total (Stud 10)	CLOSED	0.119	0.130	0.150	0.119	0.121	0.140
SAM17A SAM17B	TX Coil (Stud 8 or 9)	OPEN	0.035	0.067	0.096	0.035	0.063	0.089
	TX Coil (Stud 8 or 9)	CLOSED	0.033	0.049	0.059	0.033	0.047	0.056
	Timing Circuit (Stud 6)	CLOSED	0.042	0.061	0.073	0.042	0.056	0.070
	Total (Stud 10)	CLOSED	0.075	0.110	0.132	0.075	0.106	0.126

CONSTRUCTION

The Type SAM16A relays are assembled in the standard small size, single-end (S1) drawout case having studs at the lower end in the rear for external connections. The electrical connections between the relay components and the case studs are made through stationary molded inner and outer blocks between which nests a removable connecting plug which completes the circuits. The outer block attached to the case has the studs for the external connections, and the inner block has the terminals for the internal connections.

The relay components are mounted on the steel framework called the cradle forming a complete unit with all leads terminated at the inner block. This cradle is held firmly in the case by latches at both top and bottom and by a guide pin at the back of the case. The connection plug, besides making the electrical connections between the blocks of the cradle and case, also locks the latch in place. The cover, which is drawn to the case by thumbscrews, holds the connecting plugs in place. The target reset mechanism is a part of the cover assembly.

A separate testing plug can be inserted in place of the connecting plug to test the relay in place on the panel either from its own source of voltage, or from other sources. Or the relay can be drawn out and replaced by another which has been tested in the laboratory.

The relay case is suitable for either semi-flush or surface mounting on all panels up to 2 inches thick and appropriate hardware is available. However, panel thickness must be indicated on the relay order to ensure that proper hardware will be included. For outline and drilling dimensions, see Figure 12. Every circuit in the drawout case has an auxiliary brush, as shown in Figure 6, to provide adequate overlap when the connecting plug is withdrawn or inserted.

The cradle assembly includes the printed circuit card assemblies for the zone-2 and zone-3 time measuring circuits, the rheostats used in setting the time, dropping resistors used in the DC voltage selection, and the auxiliary telephone-type relays (TX, TU2, and TU3). The location of these components is indicated in Figures 1 and 2. Component designations in these figures agrees with the designations on the internal connection diagrams in Figures 7, 8, and 9.

RECEIVING, HANDLING, AND STORAGE

These relays, when not included as a part of a control panel, will be shipped in cartons designed to protect them against damage. Immediately upon receipt of a relay, examine it for any damage sustained in transit. If injury or damage resulting from rough handling is evident, file a claim at once with the transportation company and promptly notify the nearest General Electric Sales Office.

Reasonable care should be exercised in unpacking the relay. If the relays are not to be installed immediately, they should be stored in their original cartons in a place that is free from moisture, dust, and metallic chips. Foreign matter collected on the outside of the case may find its way inside when the cover is removed and cause trouble in the operation of the relay.

ACCEPTANCE TESTS

Immediately upon receipt of the relay and INSPECTION AND ACCEPTANCE TEST should be made to make sure that no damage has been sustained in shipment and that the relay calibrations have not been disturbed. If the examination or test indicates that readjustment is necessary, refer to the section on **SERVICING.**

VISUAL INSPECTION

Check the nameplate stamping to make sure that the model number and rating of the relay agree with the requisition.

Remove the relay from its case and check that there are no broken or cracked molded parts nor other signs of physical damage. The printed circuit cards should be held securely in their receptacles by the grooved clamping plate on the left side of the relay.

MECHANICAL INSPECTION

It is recommended that the following mechanical adjustments be checked:

1. Operate each auxiliary telephone-type unit (TX, TU2, and TU3) manually to be sure the armatures are moving freely. With the armature closed the normally closed contacts should make with approximately .005" wipe. This can be checked by inserting a .005" shim, between the residual screw and the pole piece and operating the armature by hand. The N.O. contacts should make before the residual screw strikes the shim.

   With the armature open, each normally open contact should have a gap of .010" to .015".

2. Check the location of the contact brushes on the cradle and case blocks against the internal connection diagram (Figure 7 or 8).

ELECTRICAL TESTS

It is recommended that the following electrical tests be made immediately upon receipt of the relay. All tests should be made with the relay in its case and in a reasonably level position.

1. TX Unit Pickup - Connect the relay to a source of adjustable DC voltage as shown in Figure 10 or Figure 11, being sure to observe polarity since this is important in subsequent tests. As shipped from the factory the DC voltage selection link should be in the 125V DC position. Check that it is in this position. Then close switch S1 and slowly increase the voltage until the TX unit operates. It should operate at less than 50% of rated DC voltage, that is less than 62 volts for the 125 volt link setting.

Now shift the link to the 48 volt position and then to the 250 volt position and check that TX picks up at less than 50% of link setting in each case. Return the link to the 125 volt position before proceeding with the time checks.

It will be noted on the internal connections (Figure 7, SAM16A) that the TX unit may be energized from either stud 8 or 9. In the test connections of

Figure 9 shift the lead from stud 8 to stud 9 of the test plug and check that TX picks up at the same value for this input connection.

2. Time Checks - As shipped from the factory the adjusting knobs for the zone-2 and zone-3 timing circuits are both set at the maximum scale calibration position (3 seconds for the typical timing relay used on distance relay applications). Connect an electronic timer to be started by switch S1 and stopped by the zone-2 contact (TU2) as shown in Figure 10. Check that TU2 is operating within ±3% of the dial marking (between 2.91 and 3.09 seconds for the 3 second timer). Now shift the timer-stop leads to studs 4-5, as shown by the dotted connections in Figure 10 and check that the zone-3 timing circuit is operating within ± 3% of the maximum scale marking.

Note that the diagram in Figure 10 applies specifically to the Type SAM16A timing relay. The test connections for the Type SAM17A are similar except that to check the timing circuit the electronic timer stop leads should be connected to studs 4-5 (see Figure 11).

INSTALLATION PROCEDURE

LOCATION

The location of the relay should be clean and dry, free from dust, excessive heat and vibration and should be well lighted to facilitate inspection and testing.

MOUNTING

The relay should be mounted on a vertical surface. The outline and panel drilling dimensions are shown in Figure 12.

CONNECTIONS

Internal connections are shown in Figure 7 for the SAM16A, Figure 8 for the SAM17A and Figure 9 for the SAM17B.

INSPECTION

If the relay has been stored for any length of time prior to installation, it is recommended that the VISUAL and MECHANICAL INSPECTION points and the ELECTRICAL TESTS listed under **ACCEPTANCE TESTS** be repeated.

VOLTAGE SELECTION LINK

Before proceeding with the installation checks, be sure that the DC voltage selection link is in the correct position for the application.

TIME SETTINGS

At the time of installation the zone-2 and zone-3 timing circuits should be set for the operating time required for the particular application. This is accomplished by means of the calibration knobs accessible from the front of the relay (see Figure 1 and 1A). These knobs control adjustment rheostats R_1 and R_2 shown in Figures 7, 8, and 9. Fairly accurate settings within ±3% of the dial marking, can be obtained by setting the knob at one of the seven (7) etched calibration points or approximate settings can be obtained by interpolating between

two of the set points. The expanded scale will facilitate approximate time settings at the low end of the range.

If more accurate time settings are desired the test circuit shown in Figure 10, and described under **ACCEPTANCE TESTS**, should be used. As shipped from the factory the shafts of calibration rheostats R_1 and R_2 are clamped in the set position by means of the round knurled locking nuts located behind the calibration knobs. Before attempting a change in the setting of the calibration rheostats, their shafts should be released by loosening the locking nut. The calibration knobs should then be set at the required position as determined by the timing scheme shown in Figure 10. An electronic timer should be used in making these settings. After the calibration knobs have been set, clamp the rheostat shafts by turning the locking nuts in a clockwise direction. Then recheck the time again since it is possible that the rheostat settings may be slightly disturbed when the locking nuts are tightened. If a slight refinement in the time setting is necessary, make this adjustment **without** releasing the locking nuts.

PERIODIC CHECKS AND ROUTINE MAINTENANCE

In view of the vital role of protective relays in the operation of a power system, it is important that a periodic test program be followed. It is recognized that the interval between periodic checks will vary depending upon environment, type of relay, and the user's experience with periodic testing. Until the user has accumulated enough experience to select the test interval best suited to his individual requirements, it is suggested that points be checked at an interval of from one to two years.

1. Time settings
2. Operation of TX unit

The procedure outlined under **ACCEPTANCE TESTS** and the connections of Figure 9 can be followed.

CONTACT CLEANING

For cleaning relay contacts, a flexible burnishing tool should be used. This consists of a flexible strip of metal with an etch-roughened surface resembling in effect a superfine file. The polishing action is so delicate that no scratches are left, yet it will clean off any corrosion thoroughly and rapidly. Its flexibility ensure the cleaning of the actual points of contact. Do not use knives, files, abrasive paper or cloth of any kind to clean relay contacts.

SERVICING

If it is found during the **ACCEPTANCE, INSTALLATION** or **PERIODIC TEST** routines that any of the factory or field adjustments have been disturbed the settings can be restored as outlined in the following paragraphs.

AUXILIARY UNITS

Contact gaps of the telephone-type auxiliary units (TX, TU2, TU3) can be adjusted by bending the stationary contact brush to obtain the specified .015" gap. After this adjustment is made, the wipe of the circuit-closing contacts should be checked to be sure it is still .005". Wipe can be restored by bending the moving contact brush as required.

If it is found that the voltage pickup of the TX unit is too high, it can be reduced by decreasing the gap between armature and pole face by bending the stop below the contact operating arm. To raise the pickup voltage, the armature gap should be increased. After this adjustment, it will be necessary to readjust the contacts to restore the 0.015" gap and the .005" wipe.

TIMING CIRCUITS

If it is found during periodic tests that the specific time settings for the installation are out of limits, restore the setting by means of the calibrating knobs on the front of the relay using the connections of Figures 10 or 11 and the description in the **INSTALLATION PROCEDURE** section (Time Settings).

RENEWAL PARTS

It is recommended that sufficient quantities of renewal parts by carried in stock to enable the prompt replacement of any that are worn, broken, or damaged.

When ordering renewal parts, address the nearest Sales Office of the General Electric Company, specify the quantity required, the name of the part wanted, and give the complete nameplate data. If possible, give the General Electric requisition number on which the relay was furnished.

Figure 1A (8039885) Relay Type SAM16A12A Removed from Case (Front View)

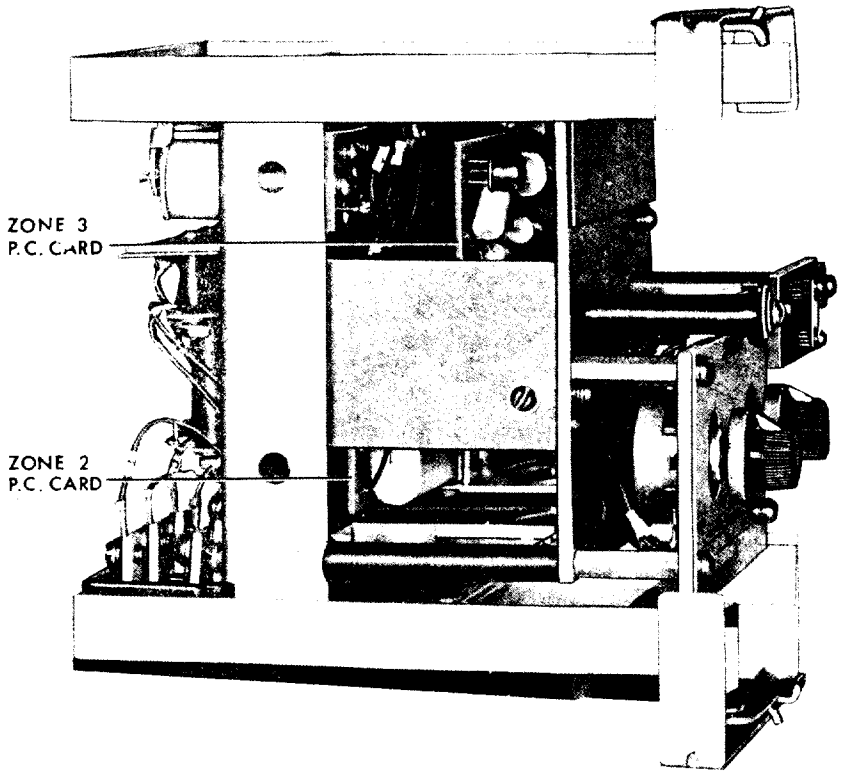

Figure 1B (8039879) Relay Type SAM16A12A Removed from Case (Side View)

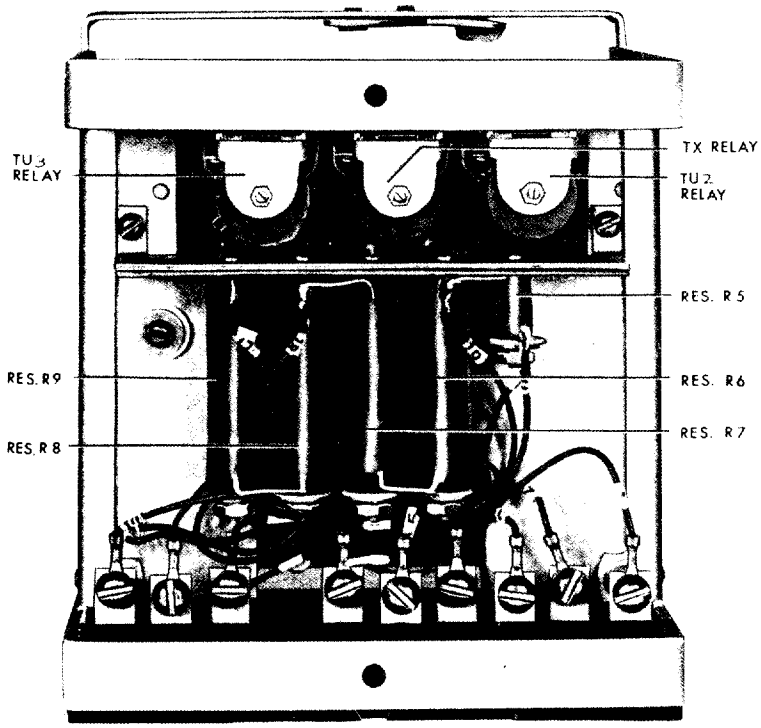

Figure 2 (8039880) Relay Type SAM16A12A Removed from Case (Rear View)

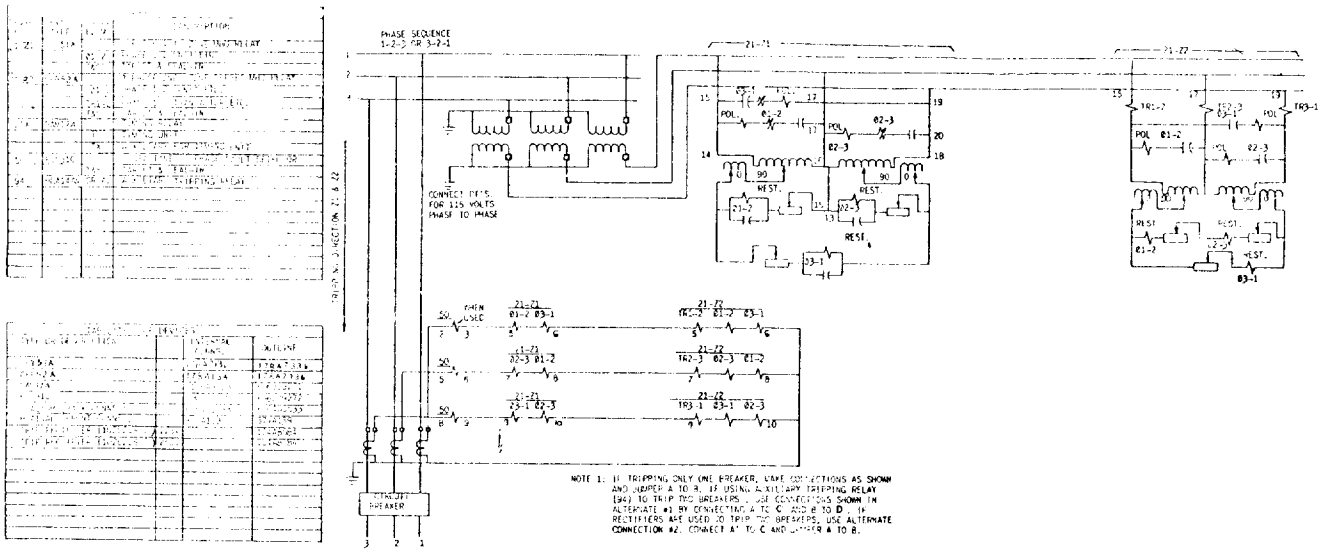

Figure 3 (0164B9178) Elementary Diagram for 2 Zone Distance Protection with Zone Packaging using CEY51A, CEB52A and SAM17A Relays

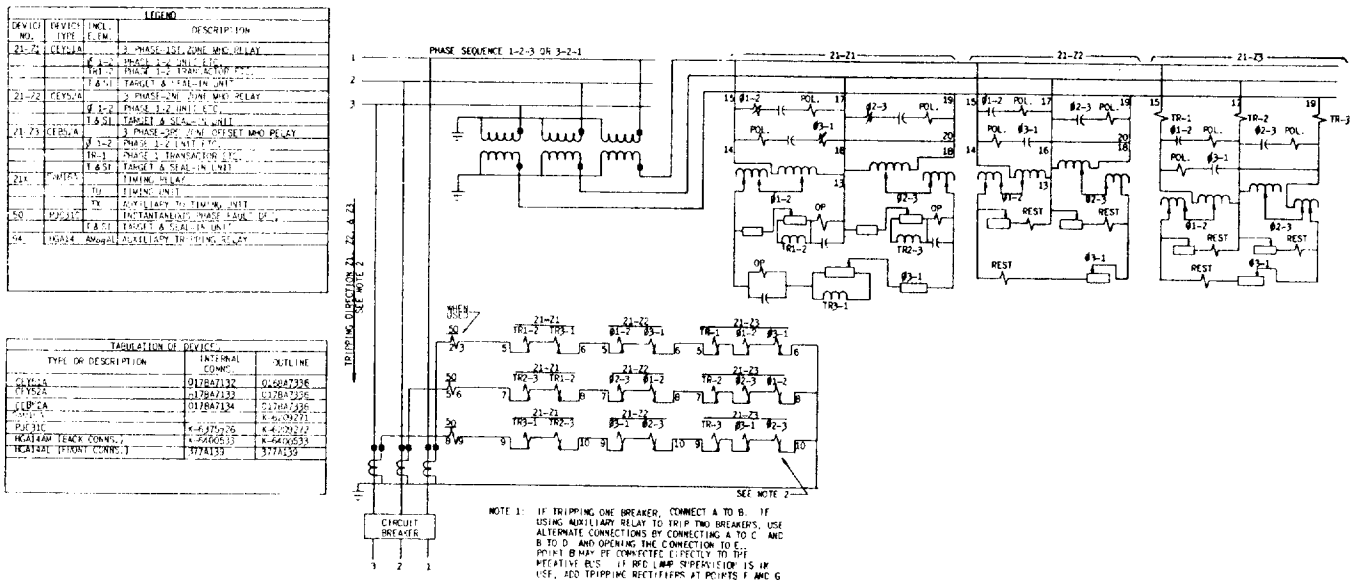

Figure 3A (0116B9333-5) Elementary Diagram for 3 Zone Distance Protection using CEY51A, CEB52A and SAM17A Relays

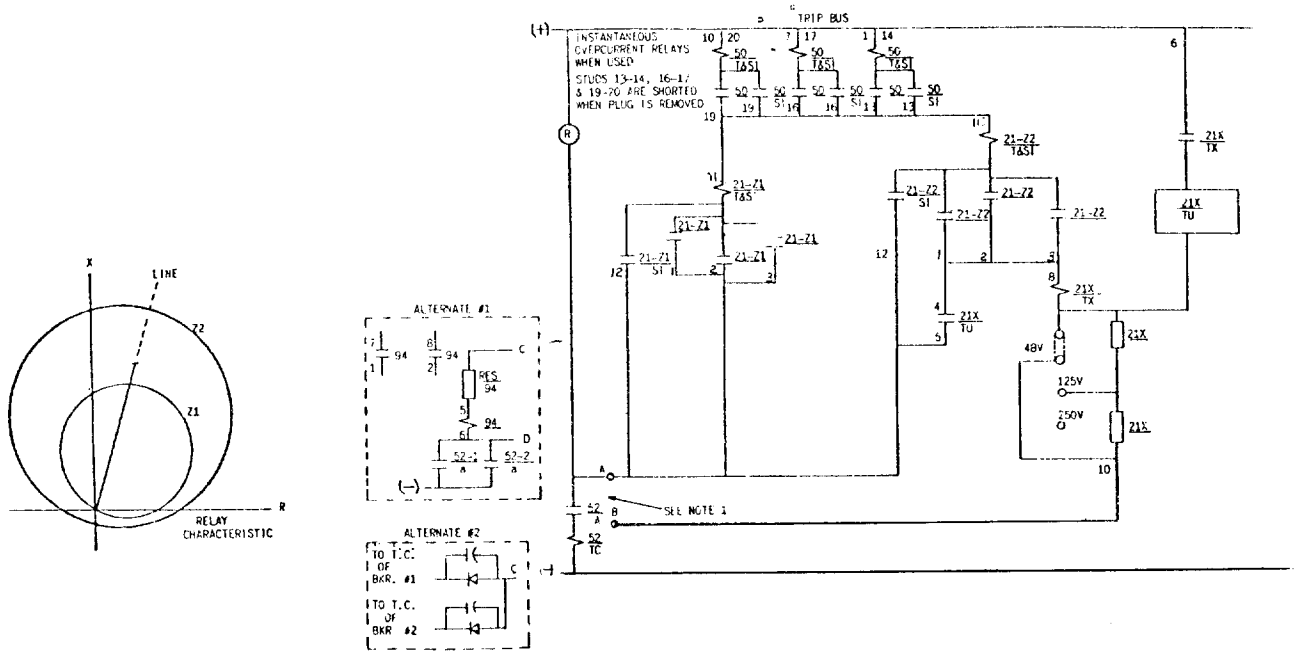

Figure 3 (Continued)

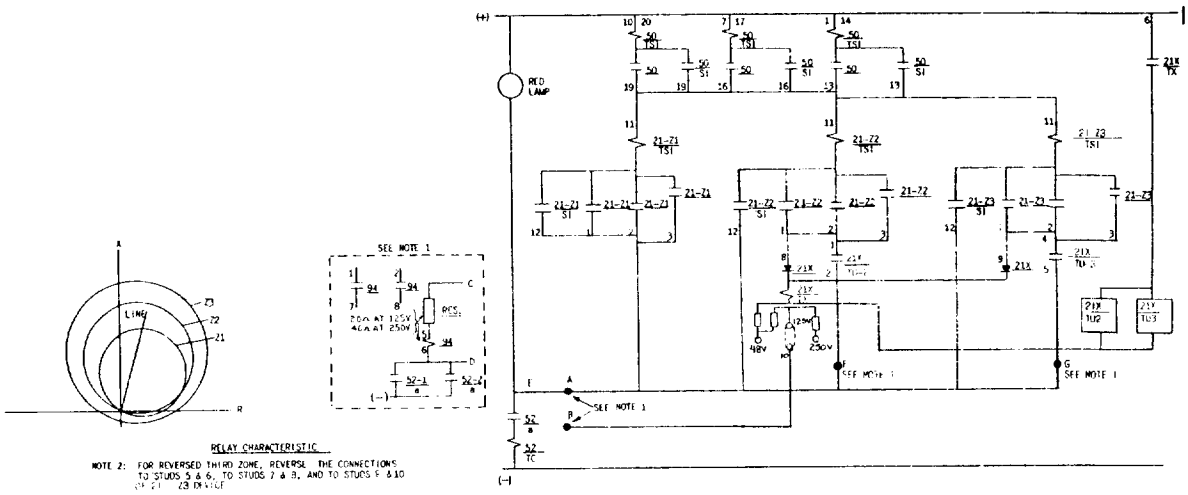

Figure 3A (Continued)

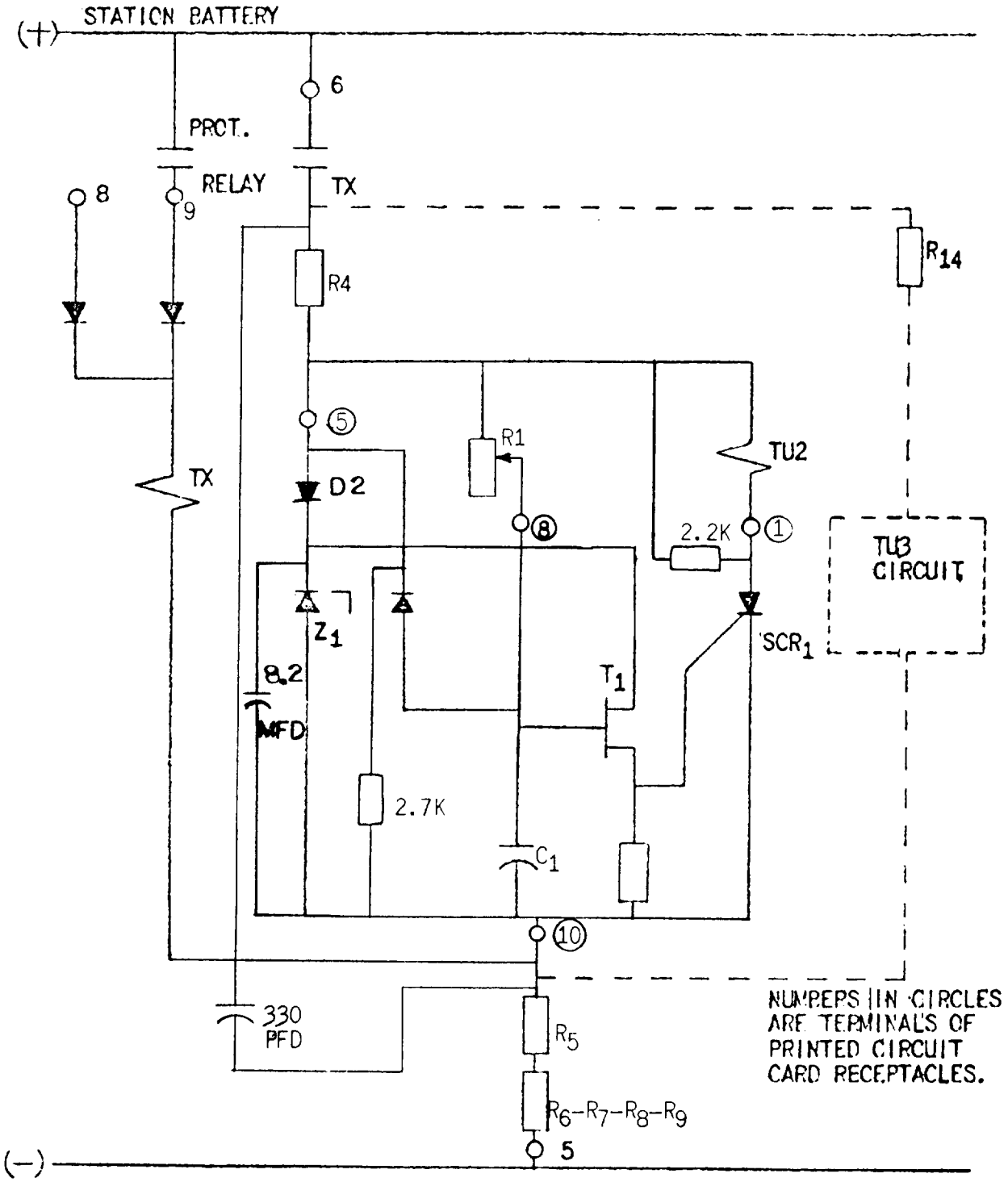

Figure 4 (0208A2486-1) Simplified Schematic Diagram of the Timing Circuit Used in the SAM16A, SAM17A and SAM17B Relays

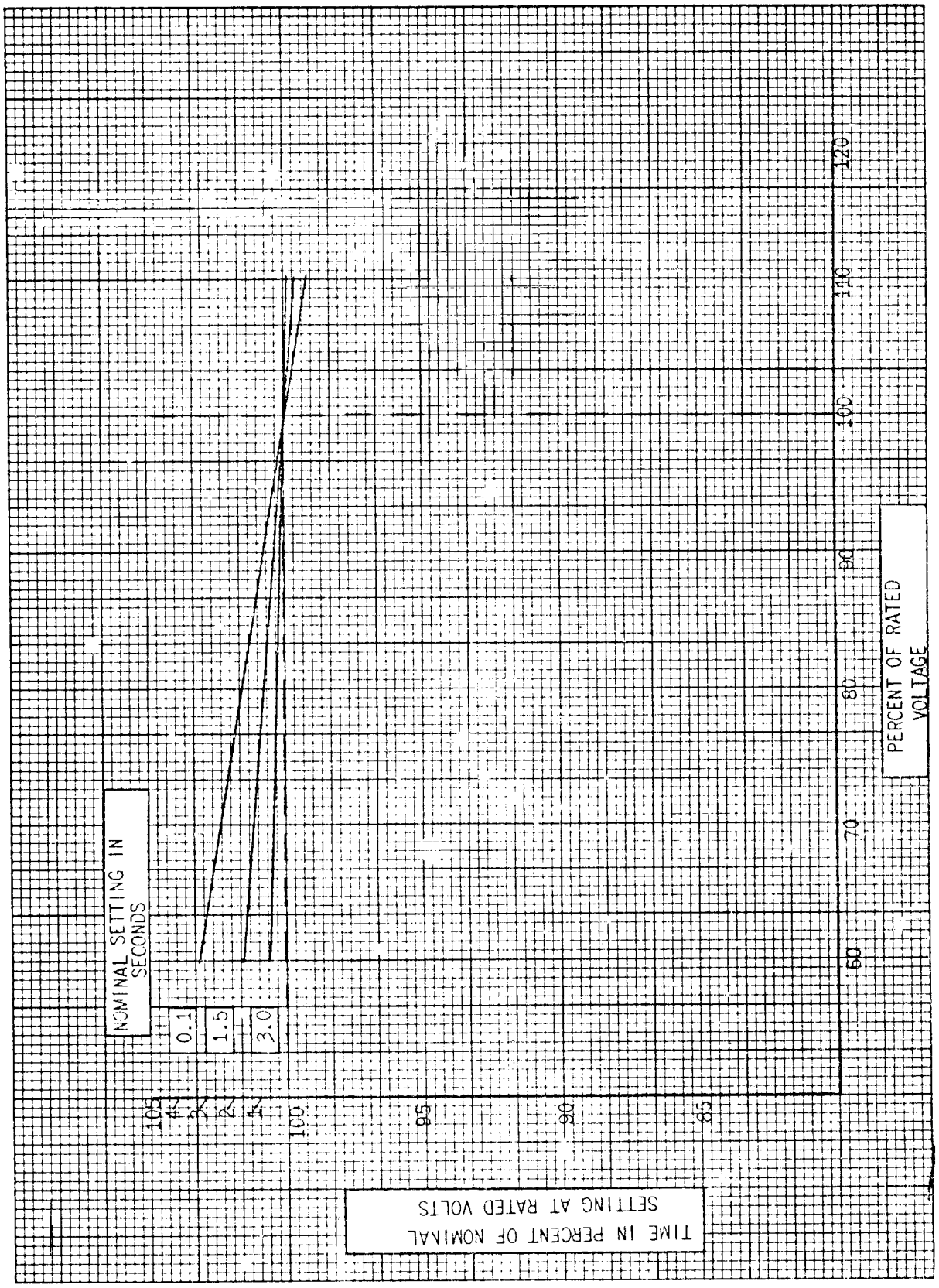

Figure 5 (0178A8162) Variation in Operating Time with Change in DC Control Voltage

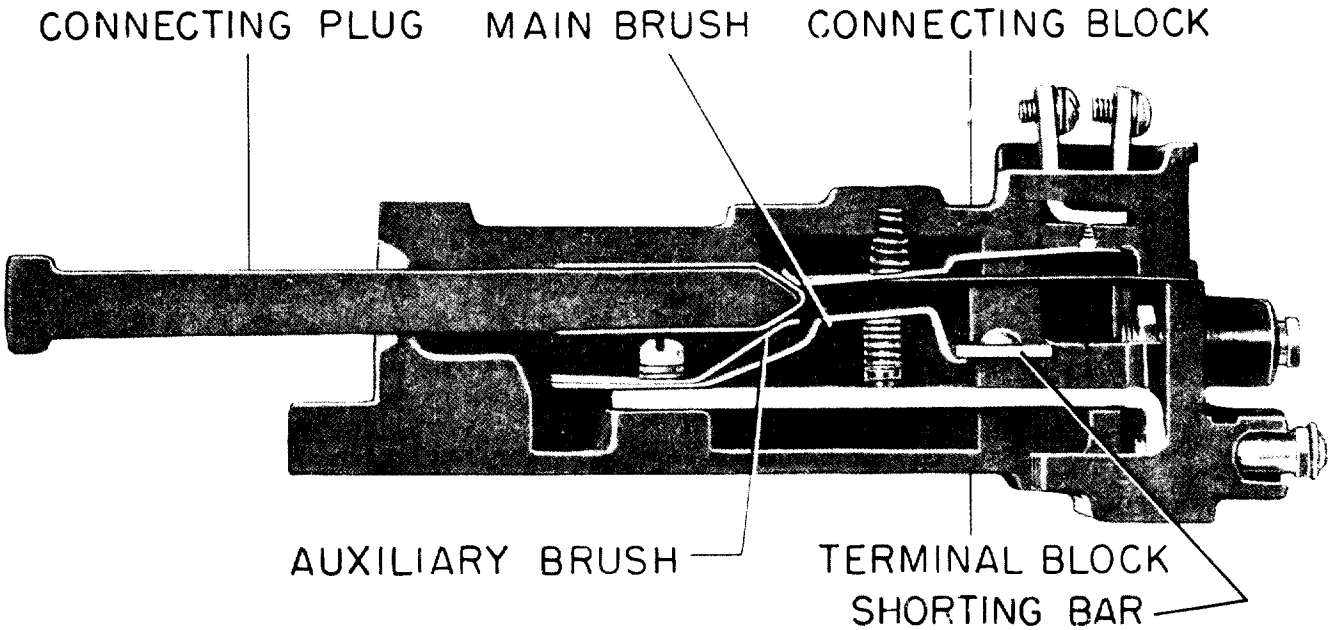

NOTE: AFTER ENGAGING AUXILIARY BRUSH, CONNECTING PLUG TRAVELS 1/4 INCH BEFORE ENGAGING THE MAIN BRUSH ON THE TERMINAL BLOCK

Figure 6 (8025039) Cross Section of Drawout Case Showing Position of Auxiliary Brush

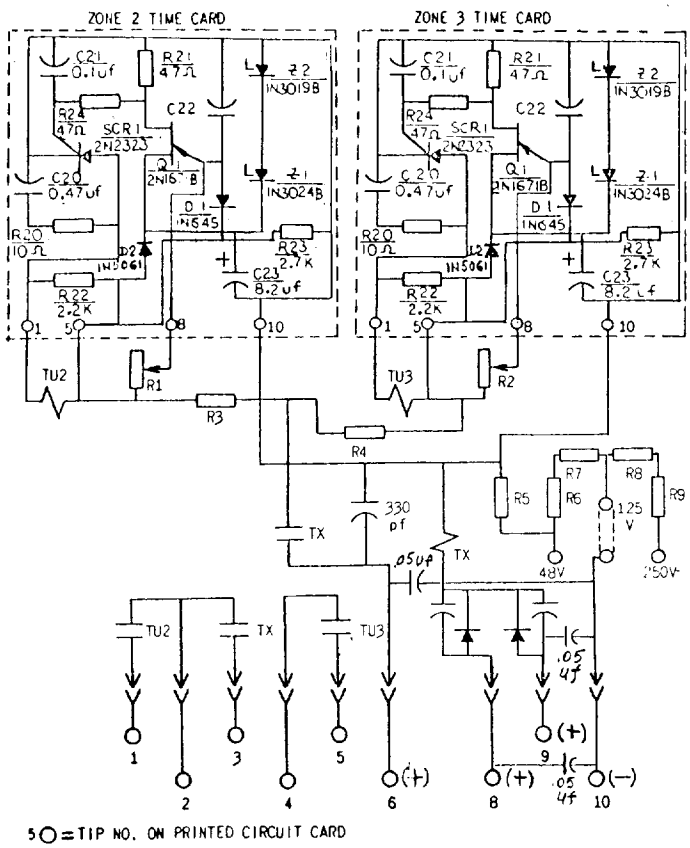

Figure 7A (0208A2429 Sh.1 [6]) Internal Connections Diagram for the SAM16A12 and up Relays

MODEL	FORM		
12SAM16A(−)A	12	13	
VOLTS D.C.	48/125/250	48/110/220	
RESISTANCE IN OHMS			
TX COIL	1300	1300	
TU2 COIL	650	650	
TU3 COIL	650	650	
R1	1.5 MEG.	1.5 MEG.	
R2	1.5 MEG.	1.5 MEG.	
R3	400	400	
R4	400	400	
R5	30	30	
R6	250	200	
R7	250	200	
R8	375	350	
R9	375	350	

Figure 7B (0208A2429 Sh.2 [1]) Internal Connections Diagram for the SAM16A12 and up Relays

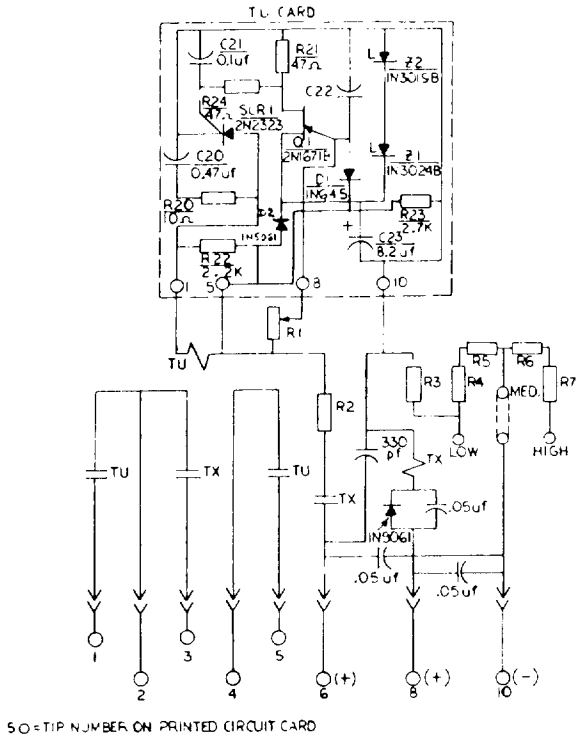

Figure 8A (0269A3090 Sh.1 [2]) Internal Connections Diagram for the SAM17A22 and up Relays

MODEL	FORM		
12SAM17A(−)A	22	23	
VOLTS D.C.	48/125/250	48/110/220	
RESISTANCE IN OHMS			
TX COIL	1300	1300	
TU COIL	650	650	
R1	1.5MEG	1.5MEG	
R2	400	400	
R3	60	60	
R4	250	200	
R5	250	200	
R6	375	350	
R7	375	350	

* Figure 8B (0269A3090 Sh.2 [1]) Internal Connections Diagram for the SAM17A and up Relays

*Revised since last issue

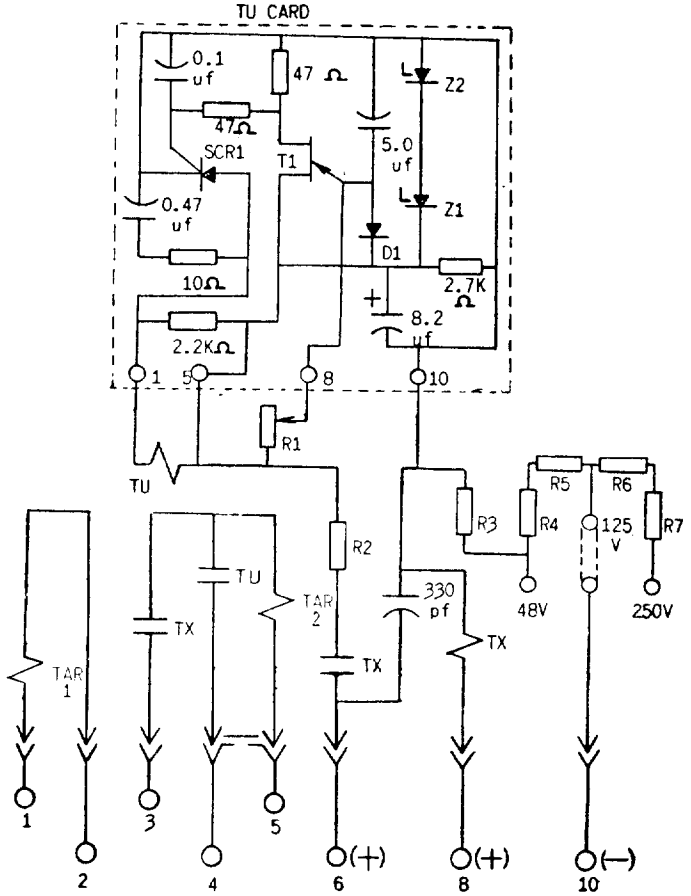

5 O = TIP NO ON PRINTED CIRCUIT CARD

Figure 9A (0208A2431 Sh.1 [1]) Internal Connections Diagram for the SAM17A12 and up Relays

MODEL	FORM		
SAM17B(−)A	12		
VOLTS D.C.	48/125/250		
RESISTANCE IN OHMS			
TX COIL	1300		
TU COIL	650		
R1	1.5 MEG.		
R2	400		
R3	60		
R4	250		
R5	250		
R6	375		
R7	375		

Figure 9B (0208A2431 Sh.2) Internal Connections Diagram for the SAM17B12 and up Relays

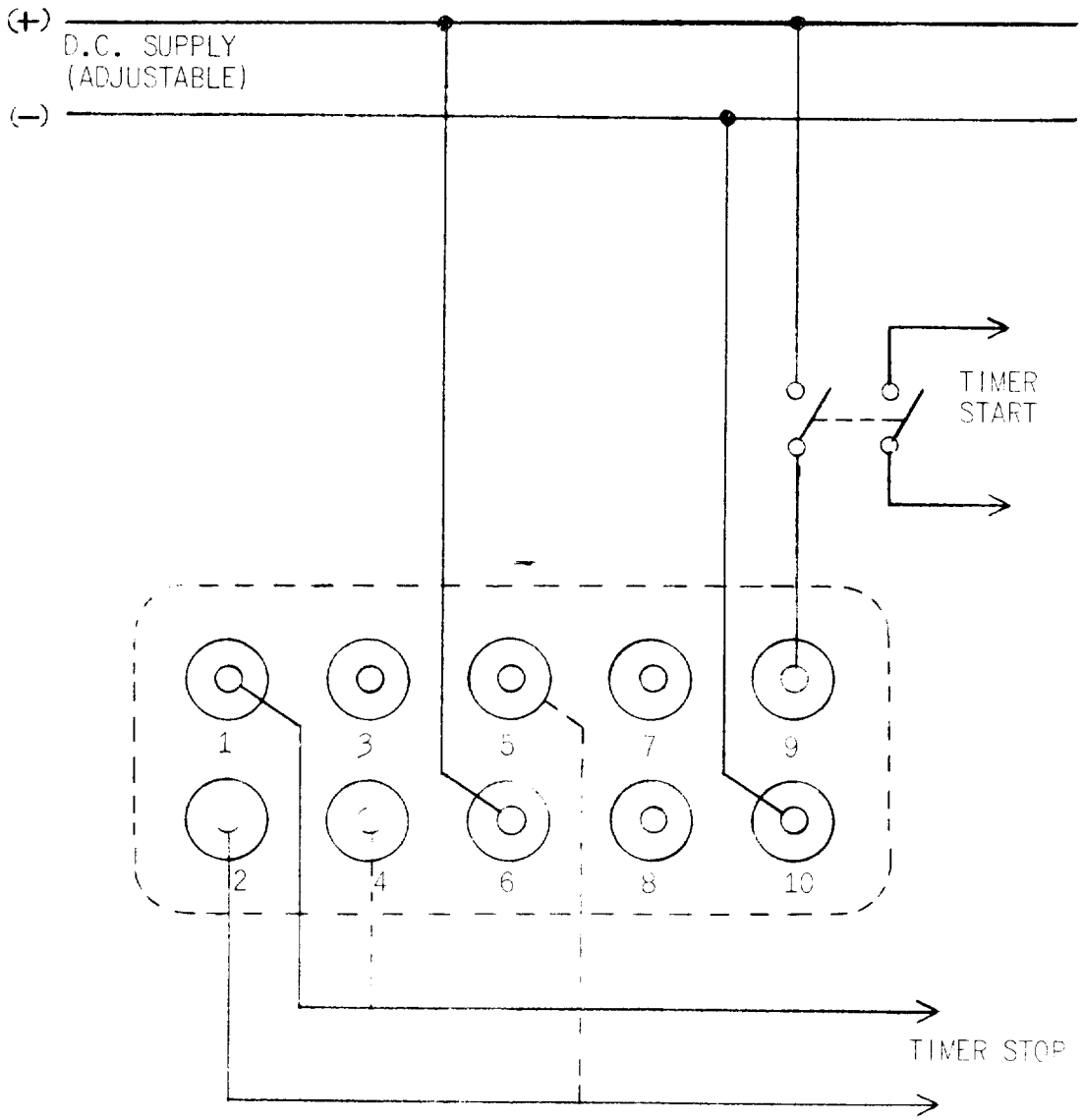

Figure 10 (0178A9160) Connections for Laboratory of Field Testing of the SAM16A Relays using the Type XLA Test Plug

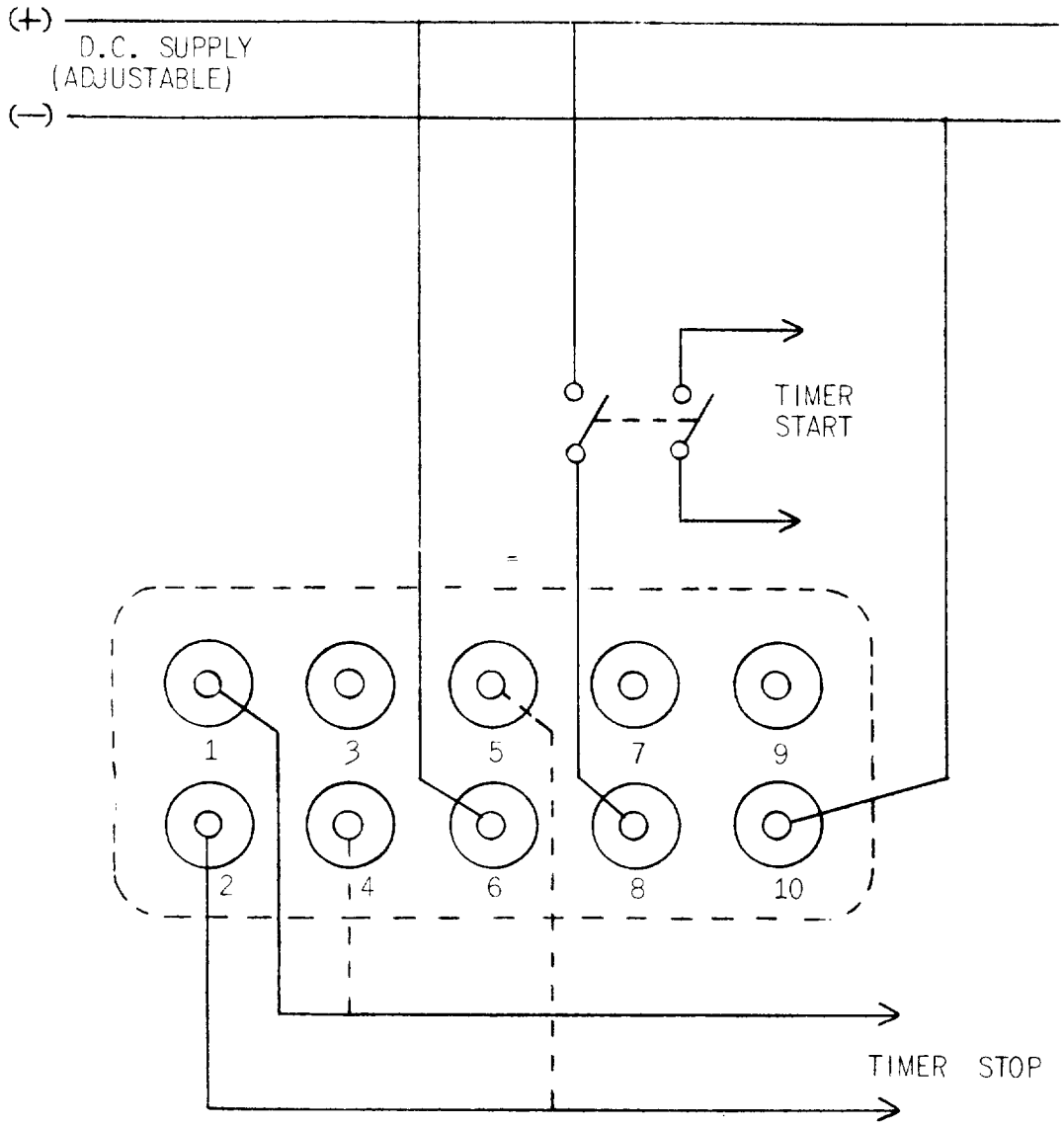

Figure 11 (0178A9161) Connections for Laboratory of Field Testing of the SAM17A Relays using the Type XLA Test Plug

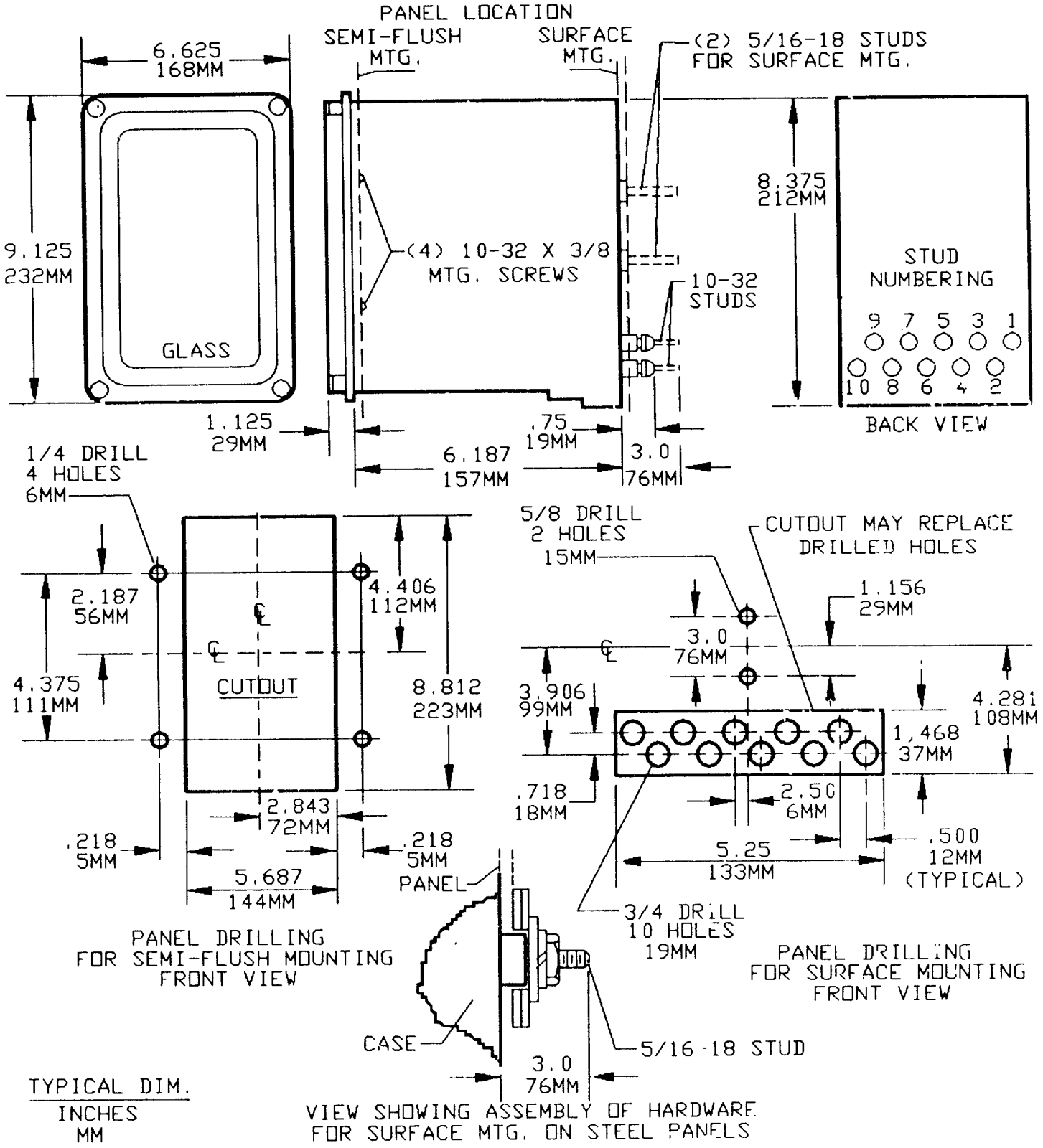

* Figure 12 (K-6209271 [8]) Outline and Panel Drilling Dimensions for Drawout Relays - Size S1

*Revised since last issue

GE Power Management

215 Anderson Avenue
Markham, Ontario
Canada L6E 1B3
Tel: (905) 294-6222
Fax: (905) 201-2098
www.ge.com/indsys/pm