SIZE	DWG NO	SHT	REV
A	19L0718WH3	2	1

REV	DESCRIPTION	DATE	APPROVED
1	UPDATE CAT NO	2/18/04	BTR

TOL	+/−
A	.06
B	.12
C	.18
D	.50
E	.04

BUSH. DIA. 1.75[44](B)

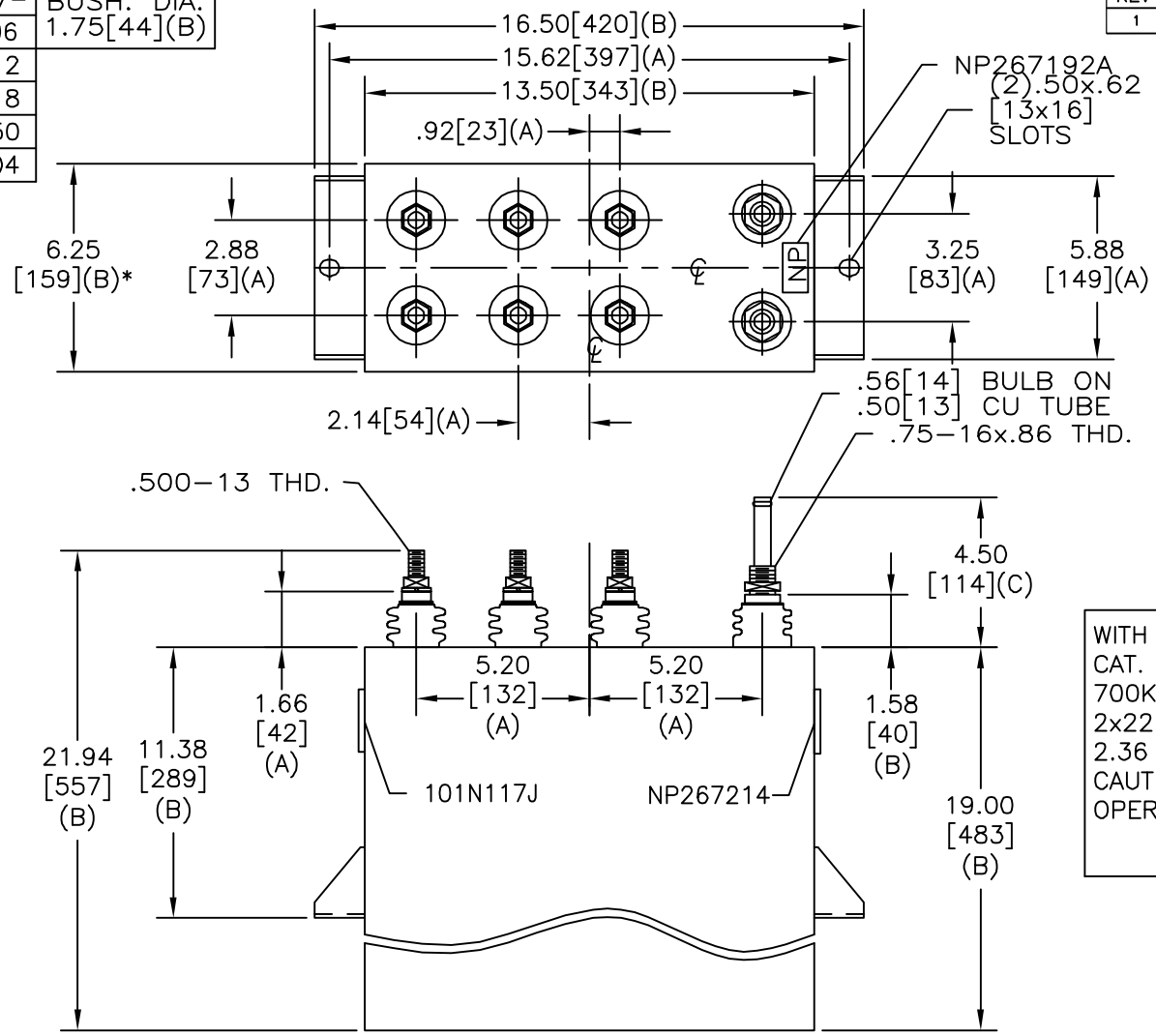

TERM	uF	kVAR
1	22.92	58.3
2	22.92	58.3
3	45.85	116.7
4	45.85	116.7
5	68.77	175
6	68.77	175

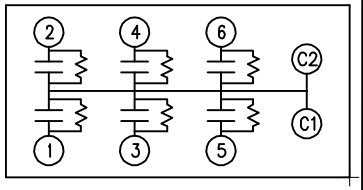

SCHEMATIC DIAGRAM − 617

WITH INTERNAL DISCH RESISTORS
CAT. 19L0718WH3 SN
700KVAR 1500V 180HZ 1PH
2x22.9+2x45.9+2x68.8 UF/TAP
2.36 GAL. COMBUSTIBLE LIQUID
CAUTION! BEFORE INSTALLING OR
OPERATING READ GEH−2733

NP267214

* UP TO +.50[13]
CASE BULGE

MAX. TERMINAL
TIGHTENING TORQUE
15 FT−LBS

NP267192A

INDUSTRIAL SYSTEMS FORT EDWARD, N.Y., U.S.A.		SIZE A	OUTLINE 19L0718WH3
DRAWN B. ROSS	DATE SEP 19, 1996		
ISSUED	DATE 9−25−96	SCALE	SHEET 2 CONT ON −

DISTR. TO