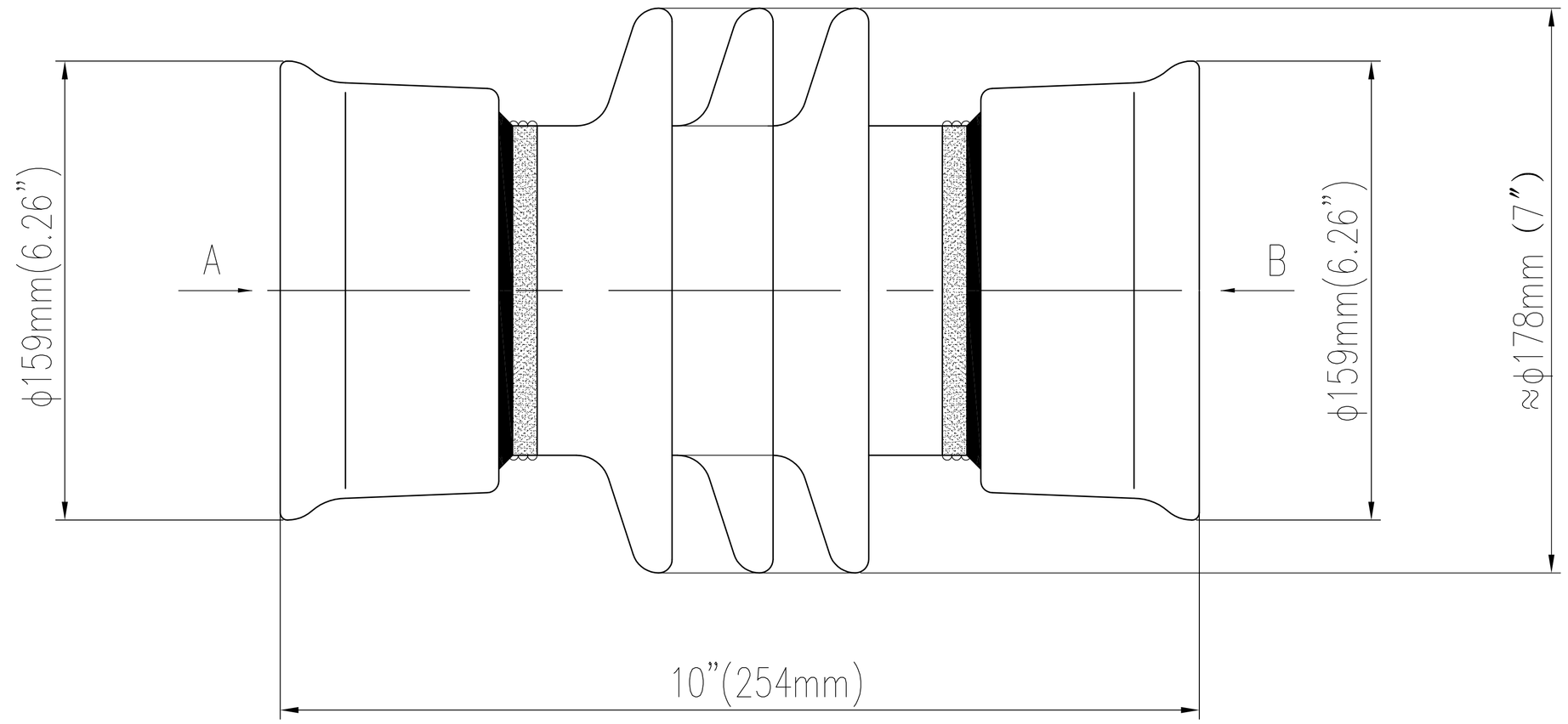

Characteristics:

Standard	ANSI C29.9 and C29.1
Leakage distance Inches(mm)	10.5"(267mm)
Cantilever strength (upright,underhung) Pound(KN)	4000 (17.8kN)
Tensile strength Pound(KN)	15000 (66.75kN)
Torsion strength Pound-inches (KNm)	12000 (1.4kN.m)
Compression strength Pound(KN)	20000 (89kN)
Voltage class kV	7.5
Impulse flashover positive kV	105
Wet power frequency withstand voltage 10sec kV	30
Lightning impulse withstand voltage kV	95
Test voltage rms. to ground Max. RIV microwave at 1000KHz	5 50
Net weight Pound/kg	≈26.5(≈12kg)
Flange material	Nordular case iron
Glazed color	ANSI 70 Gray

A, B Direction

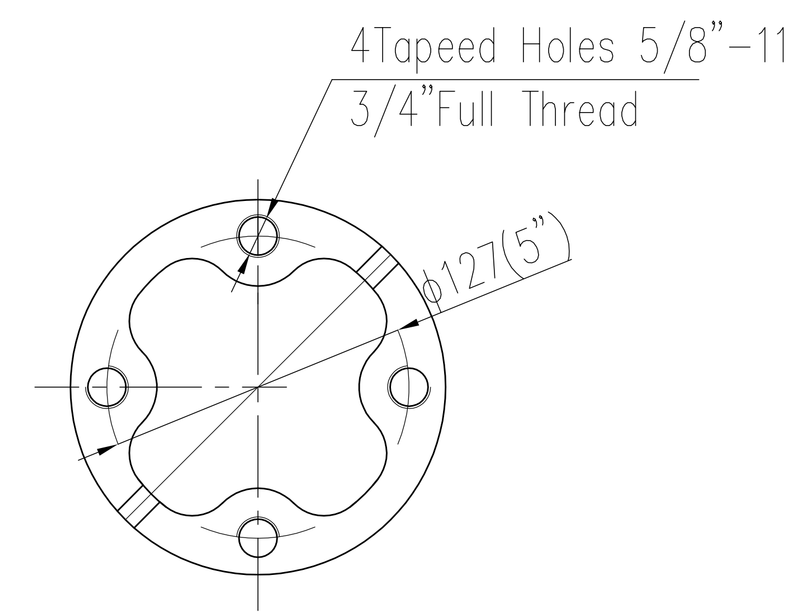

Rev01	5/16/2016			
	By		Date	
Designed				
Checked				
Approved				

Standard Drawing

Xian XD High Voltage Porcelain Insulator Co. Ltd.

TR222 Solid-Core Post Insulator