SIZE	DWG NO	SHT	REV
A	37G50003	1	

REV	DESCRIPTION	DATE	APPROVED

3 Phase Line/Load Reactor

OPEN FRAME

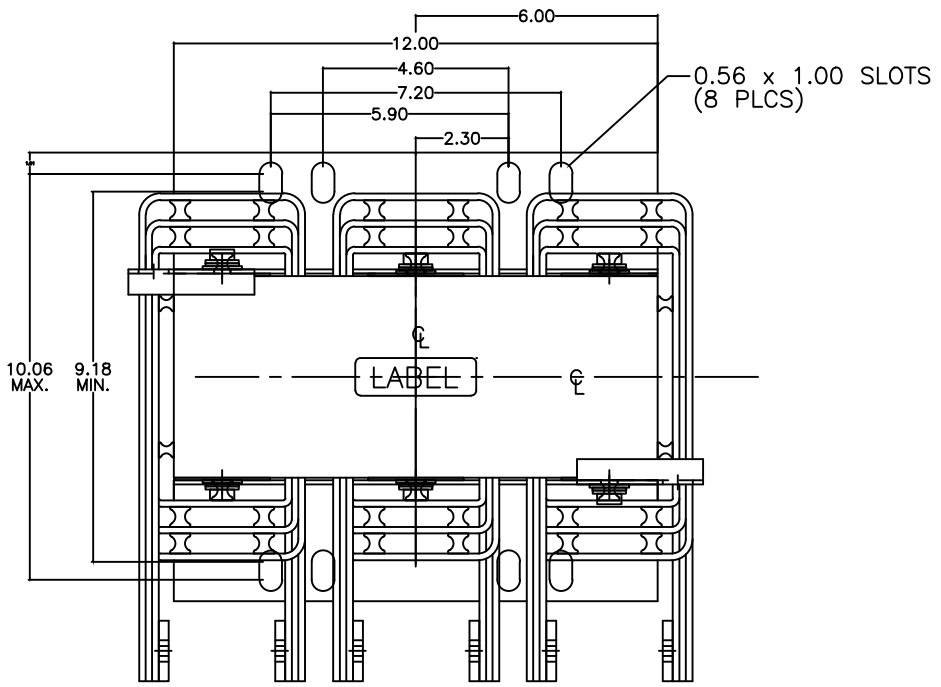

NOTE:
CENTER LINE REPRESENTS
CENTER OF REACTOR CORE

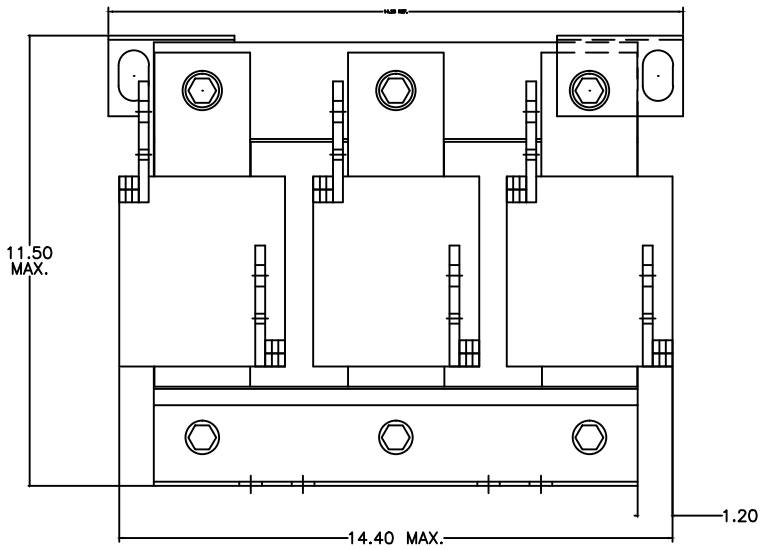

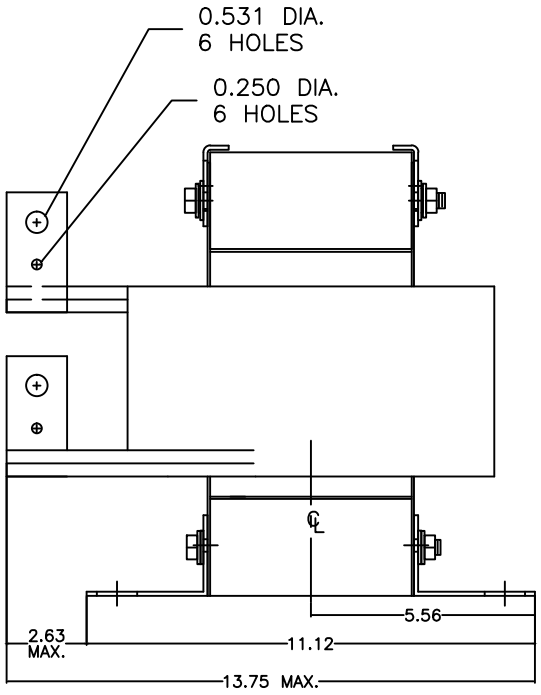

** ALSO AVAILABLE IN NEMA 1 ENCLOSURE

INDUCTANCE	WATTS LOSS	FUND. AMPS	MAX. AMPS	WEIGHT (LBS)
0.1 mH	422.0	500.0	750.0	210

GE GRID SOLUTIONS CLEARWATER, FL		SIZE A	LV LINE REACTOR 37G50003
DRAWN DCS	DATE 1/25/2017		
ISSUED	DATE 1/25/2017	SCALE	SHEET 1 CONT ON –